Work Order ID 102432

May-28-13 10:10:59 AM

102432

Item ID: D3901-1 **Accept** *N900040100* **Setup Start** *NS1*

Revision ID: **Stop** *NS2*

Item Name: Bar

Start Date: 5/27/13 **Start Qty:** 8.00 *8*

Required Date: 5/29/13 **Req'd Qty:** 8.00 *8*

Reference:

Cust Item ID:

Customer:

Run Start *NR1*

Stop *NR2*

Approvals: **Process Plan:** MLJ **Date:** 13-05-29 **Tooling:** _____ **Date:** _____

QC: _____ **Date:** _____ **SPC (Y/N):** _____ **Date:** _____

Sequence ID/ Work Center ID	Operation Description	Set Up/ Run Hours	Tool ID	Tool #	Plan Code	Accept Qty	Reject Qty	Reject Number	Insp. Stamp
Draw Nbr	**Revision Nbr**								
D3901	E								
100		0.00							
100									
Cold Saw	**Memo**	0.00	13/06/14			8	0		
Hyd Mech	Cut blanks at 55.1875"								
110		0.00							DAS 08 9-89
110									
HAAS 1	**Memo**	0.00	13/06/20			8	0		
HAAS CNC vertical machine #1	1-Mill as per folio FB090 & dwg D3901, FOLIO REV: AA DWG REV: E 2-Deburr as required								

DQA: _____ Date: _____

NCR: Yes / No

WORK ORDER NON-CONFORMANCE / UPDATE

QA Closed: Date:

Work Order: _____

Part No. _____

NCR No. _____

DISPOSITION

- Rework ☐
- Scrap ☐
- Use-as-is ☐
- Work Order Update ☐

AGAINST DEPARTMENT/PROCESS

- Skid-tube ☐
- Machining ☐
- Thermoforming ☐
- Large Fab ☐
- Crosstube ☐
- Small Fab ☐
- Finishing ☐
- Composite ☐
- Water Jet ☐
- Prod. Eng. Coor. ☐
- Rec/Store/Packaging ☐
- Supplier ☐
- Engineering ☐
- Quality ☐
- Other ☐
- ☐

Root Cause		Date	Step	Qty	Description of work order update or Non-conformance	Initial Chief Eng	Action Description	Sign & Date	Verification	QC Inspector
Doc/Data										
Equip/Tooling										
Operator										
Material										
Setup										
Other										
Process										
Supplier										
Training										
Unapproved										

FAULT CATEGORY

Landing Gear

- ☐ Bending
- ☐ Centre Not Concentric to O/S
- ☐ Cracks
- ☐ Crushed/Crimped
- ☐ Cuffs
- ☐ Heat Treat
- ☐ Inspection Strip in Tube
- ☐ Ripples in Bend
- ☐ Torque Waves in Extrusion
- ☐ Turning Sequence
- ☐ Wave/Twist in Tube

General

- ☐ Bend
- ☐ BOM/Route
- ☐ Broken/Damaged
- ☐ Burrs
- ☐ Contamination
- ☐ Countersink
- ☐ Cut Too Short
- ☐ Drill Holes
- ☐ Drawing
- ☐ Finish
- ☐ Folio
- ☐ Grain
- ☐ Hardware
- ☐ Inspection Incomplete
- ☐ Instructions Incomplete/Unclear
- ☐ Maintenance
- ☐ Mislabeled
- ☐ Misread
- ☐ Offset
- ☐ Out of Calibration
- ☐ Out of Sequence
- ☐ Outside Dimensions
- ☐ Ovalized
- ☐ Over/Under tolerance
- ☐ Part Incorrect
- ☐ Part Lost/Missing
- ☐ Part Moved
- ☐ Positioned Wrong
- ☐ Power Loss/Surge
- ☐ Pressure/Forced
- ☐ Temperature/Cure
- ☐ Weld
- ☐ Wrong Stock Pulled
- ☐ Other

_____

_____

_____

Work Order ID 102432

102432

May-28-13 10:10:59 AM

Item ID: D3901-1 **Accept** *N900040100* **Setup Start** *NS1*

Revision ID: **Stop** *NS2*

Item Name: Bar

Start Date: 5/27/13 **Start Qty:** 8.00 *8*

Required Date: 5/29/13 **Req'd Qty:** 8.00 *8*

Reference:

Cust Item ID:

Customer:

Run Start *NR1*

Stop *NR2*

Approvals: **Process Plan:** _____ **Date:** _____ **Tooling:** _____ **Date:** _____

QC: _____ **Date:** _____ **SPC (Y/N):** _____ **Date:** _____

Sequence ID/ Work Center ID	Operation Description	Set Up/ Run Hours	Tool ID	Tool #	Plan Code	Accept Qty	Reject Qty	Reject Number	Insp. Stamp
120	QC2- Inspect parts off machine FAI/FAIB	0.00	BA	13/06/20		8	ϕ		DAS 08 2-89
120									
QC	**Memo**	0.00							
Quality Control	***EXTRA MATERIAL WILL BE CUT ON ASSEMBLY***								
130	QC8- Inspect parts - second check	0.00		13-C-21		8	ϕ		DAS 04 2-89
130									
QC	**Memo**	0.00							
Quality Control	***EXTRA MATERIAL WILL BE CUT ON ASSEMBLY***								
140	Identify as per dwg & Stock Location: W4001	0.00				8	13-06-24		MAL
140									
Packaging	**Memo**	0.00							
Packaging									

DQA: _____ Date: _____

NCR: Yes / No

WORK ORDER NON-CONFORMANCE / UPDATE

QA Closed: Date:

Work Order: _____

Part No. _____

NCR No. _____

DISPOSITION

- Rework ☐
- Scrap ☐
- Use-as-is ☐
- Work Order Update ☐

AGAINST DEPARTMENT/PROCESS

- Skid-tube ☐
- Machining ☐
- Thermoforming ☐
- Large Fab ☐
- Crosstube ☐
- Small Fab ☐
- Finishing ☐
- Composite ☐
- Water Jet ☐
- Prod. Eng. Coor. ☐
- Rec/Store/Packaging ☐
- Supplier ☐
- Engineering ☐
- Quality ☐
- Other ☐
- ☐

Root Cause		Date	Step	Qty	Description of work order update or Non-conformance	Initial Chief Eng	Action Description	Sign & Date	Verification	QC Inspector
Doc/Data										
Equip/Tooling										
Operator										
Material										
Setup										
Other										
Process										
Supplier										
Training										
Unapproved										

FAULT CATEGORY

Landing Gear

- ☐ Bending
- ☐ Centre Not Concentric to O/S
- ☐ Cracks
- ☐ Crushed/Crimped
- ☐ Cuffs
- ☐ Heat Treat
- ☐ Inspection Strip in Tube
- ☐ Ripples in Bend
- ☐ Torque Waves in Extrusion
- ☐ Turning Sequence
- ☐ Wave/Twist in Tube

General

- ☐ Bend
- ☐ BOM/Route
- ☐ Broken/Damaged
- ☐ Burrs
- ☐ Contamination
- ☐ Countersink
- ☐ Cut Too Short
- ☐ Drill Holes
- ☐ Drawing
- ☐ Finish
- ☐ Folio
- ☐ Grain
- ☐ Hardware
- ☐ Inspection Incomplete
- ☐ Instructions Incomplete/Unclear
- ☐ Maintenance
- ☐ Mislabeled
- ☐ Misread
- ☐ Offset
- ☐ Out of Calibration
- ☐ Out of Sequence
- ☐ Outside Dimensions
- ☐ Ovalized
- ☐ Over/Under tolerance
- ☐ Part Incorrect
- ☐ Part Lost/Missing
- ☐ Part Moved
- ☐ Positioned Wrong
- ☐ Power Loss/Surge
- ☐ Pressure/Forced
- ☐ Temperature/Cure
- ☐ Weld
- ☐ Wrong Stock Pulled
- ☐ Other

_____

_____

_____

Work Order ID 102432

102432

May-28-13 10:10:59 AM

Item ID: D3901-1 **Accept** *N900040100* **Setup Start** *NS1*

Revision ID: **Stop** *NS2*

Item Name: Bar

Start Date: 5/27/13 **Start Qty:** 8.00 *8* **Cust Item ID:**

Required Date: 5/29/13 **Req'd Qty:** 8.00 *8* **Customer:**

Reference:

Run Start *NR1*

Stop *NR2*

Approvals: **Process Plan:** _____ **Date:** _____ **Tooling:** _____ **Date:** _____

QC: _____ **Date:** _____ **SPC (Y/N):** _____ **Date:** _____

Sequence ID/ Work Center ID	Operation Description	Set Up/ Run Hours	Tool ID	Tool #	Plan Code	Accept Qty	Reject Qty	Reject Number	Insp. Stamp
150	QC21- Final Inspection - Work Order Release	0.00					13	6	25
150									
QC	**Memo**	0.00							
Quality Control									

pl 13-06-24

DQA: _____ Date: _____

NCR: Yes / No

WORK ORDER NON-CONFORMANCE / UPDATE

QA Closed: Date:

Work Order: _____

Part No. _____

NCR No. _____

DISPOSITION

- Rework ☐
- Scrap ☐
- Use-as-is ☐
- Work Order Update ☐

AGAINST DEPARTMENT/PROCESS

- Skid-tube ☐
- Machining ☐
- Thermoforming ☐
- Large Fab ☐
- Crosstube ☐
- Small Fab ☐
- Finishing ☐
- Composite ☐
- Water Jet ☐
- Prod. Eng. Coor. ☐
- Rec/Store/Packaging ☐
- Supplier ☐
- Engineering ☐
- Quality ☐
- Other ☐
- ☐

Root Cause		Date	Step	Qty	Description of work order update or Non-conformance	Initial Chief Eng	Action Description	Sign & Date	Verification	QC Inspector
Doc/Data	☐									
Equip/Tooling	☐									
Operator	☐									
Material	☐									
Setup	☐									
Other	☐									
Process	☐									
Supplier	☐									
Training	☐									
Unapproved	☐									

FAULT CATEGORY

Landing Gear

- ☐ Bending
- ☐ Centre Not Concentric to O/S
- ☐ Cracks
- ☐ Crushed/Crimped
- ☐ Cuffs
- ☐ Heat Treat
- ☐ Inspection Strip in Tube
- ☐ Ripples in Bend
- ☐ Torque Waves in Extrusion
- ☐ Turning Sequence
- ☐ Wave/Twist in Tube

General

- ☐ Bend
- ☐ BOM/Route
- ☐ Broken/Damaged
- ☐ Burrs
- ☐ Contamination
- ☐ Countersink
- ☐ Cut Too Short
- ☐ Drill Holes
- ☐ Drawing
- ☐ Finish
- ☐ Folio
- ☐ Grain
- ☐ Hardware
- ☐ Inspection Incomplete
- ☐ Instructions Incomplete/Unclear
- ☐ Maintenance
- ☐ Mislabeled
- ☐ Misread
- ☐ Offset
- ☐ Out of Calibration
- ☐ Out of Sequence
- ☐ Outside Dimensions
- ☐ Ovalized
- ☐ Over/Under tolerance
- ☐ Part Incorrect
- ☐ Part Lost/Missing
- ☐ Part Moved
- ☐ Positioned Wrong
- ☐ Power Loss/Surge
- ☐ Pressure/Forced
- ☐ Temperature/Cure
- ☐ Weld
- ☐ Wrong Stock Pulled
- ☐ Other

_____

_____

_____

Picklist Print

May-28-13 10:10:58 AM

Work Order ID: 102432

Parent Item: D3901-1 **Start Date:** 5/27/13 **Required Date:** 5/29/13

Parent Item Name: Bar **Start Qty:** 8.00 **Required Qty:** 8.00

Comments: IPP RevA: New issue DD verified by:EC verified by:JLM IPP RevB: Now on cnc JFS 12/02/13

Component Item ID/ Item Name	Replacement Item ID	Mfg/ Purch	Bin Item	Primary Location	Last Location	Route Seq ID	Unit of Measure	Qty on Hand	Qty per Kit	Total Qty	Qty Issued	Date Issued	Status
M304B0.250x0.500 304 BAR .250 x .500		Purchased	No			100	f	538.1810	**4.513**	**38.004210**			

Location	Loc Qty	Loc Code	
MAT049	538.181		
5 → 123902	2.992		23+
124518	222.855		
3 → 125367	36.334		13.8
m125804	276		

ok 13/06/14

NOT PULL FROM COMA

DQA: _____ Date: _____

NCR: Yes / No

WORK ORDER NON-CONFORMANCE / UPDATE

QA Closed: Date:

Work Order: _____

Part No. _____

NCR No. _____

DISPOSITION

- Rework ☐
- Scrap ☐
- Use-as-is ☐
- Work Order Update ☐

AGAINST DEPARTMENT/PROCESS

- Skid-tube ☐
- Machining ☐
- Thermoforming ☐
- Large Fab ☐
- Crosstube ☐
- Small Fab ☐
- Finishing ☐
- Composite ☐
- Water Jet ☐
- Prod. Eng. Coor. ☐
- Rec/Store/Packaging ☐
- Supplier ☐
- Engineering ☐
- Quality ☐
- Other ☐
- ☐

Root Cause		Date	Step	Qty	Description of work order update or Non-conformance	Initial Chief Eng	Action Description	Sign & Date	Verification	QC Inspector
Doc/Data										
Equip/Tooling										
Operator										
Material										
Setup										
Other										
Process										
Supplier										
Training										
Unapproved										

FAULT CATEGORY

Landing Gear

- ☐ Bending
- ☐ Centre Not Concentric to O/S
- ☐ Cracks
- ☐ Crushed/Crimped
- ☐ Cuffs
- ☐ Heat Treat
- ☐ Inspection Strip in Tube
- ☐ Ripples in Bend
- ☐ Torque Waves in Extrusion
- ☐ Turning Sequence
- ☐ Wave/Twist in Tube

General

- ☐ Bend
- ☐ BOM/Route
- ☐ Broken/Damaged
- ☐ Burrs
- ☐ Contamination
- ☐ Countersink
- ☐ Cut Too Short
- ☐ Drill Holes
- ☐ Drawing
- ☐ Finish
- ☐ Folio
- ☐ Grain
- ☐ Hardware
- ☐ Inspection Incomplete
- ☐ Instructions Incomplete/Unclear
- ☐ Maintenance
- ☐ Mislabeled
- ☐ Misread
- ☐ Offset
- ☐ Out of Calibration
- ☐ Out of Sequence
- ☐ Outside Dimensions
- ☐ Ovalized
- ☐ Over/Under tolerance
- ☐ Part Incorrect
- ☐ Part Lost/Missing
- ☐ Part Moved
- ☐ Positioned Wrong
- ☐ Power Loss/Surge
- ☐ Pressure/Forced
- ☐ Temperature/Cure
- ☐ Weld
- ☐ Wrong Stock Pulled
- ☐ Other

_____

_____

_____

DART AEROSPACE LTD	Work Order:	102432
Description: Bar	Part Number:	D3901-1
Inspection Dwg: D3901 Rev: E		Page 1 of 1

FIRST ARTICLE INSPECTION CHECKLIST

Drawing Dimension	Tolerance	Actual Dimension	Accept	Reject	Method of Inspection	Comments
0.25 Ref	+/-0.030	0.250	✓		Vern	GA-01
4.00	+/-0.030	4.000	✓		"	"
24.00	+/-0.030	24.00	✓		Tape	GA-12
35.00	+/-0.030	35.00	✓		"	"
44.51	+/-0.030	44.51	✓		"	"
50.04	+/-0.100	50.04	✓		"	"
0.18	+/-0.030	0.179	✓		Vern	GA-01
0.50 Ref	+/-0.030	0.490	✓		"	"
0.75	+/-0.030	0.750	✓		"	"
0.50	+/-0.030	0.510	✓		"	"
1.75	+/-0.030	1.765	✓		"	"
0.50	+/-0.030	0.500	✓		"	"

Measured by:	[signature] DAS 08 9-89	Audited by:	[signature] 9-89	Preliminary Approval:	
Date:	13/06/20	Date:	13.6.21	Date:	

Rev	Date	Change	Revised by	Approved
A	09.09.15	New Issue	KJ	
B	12.07.31	Dimensions updated per Dwg Rev C	KJ	
C	12.09.26	Dimensions updated per Dwg Rev E	KJ [signature]	[signature]

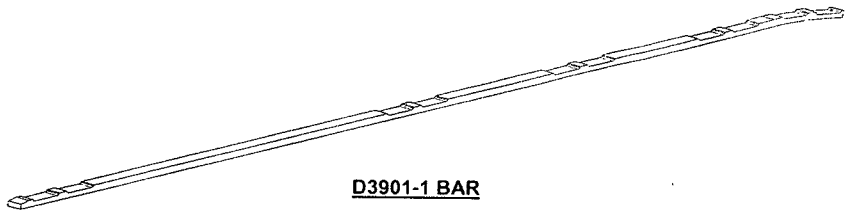

D3901-1 BAR

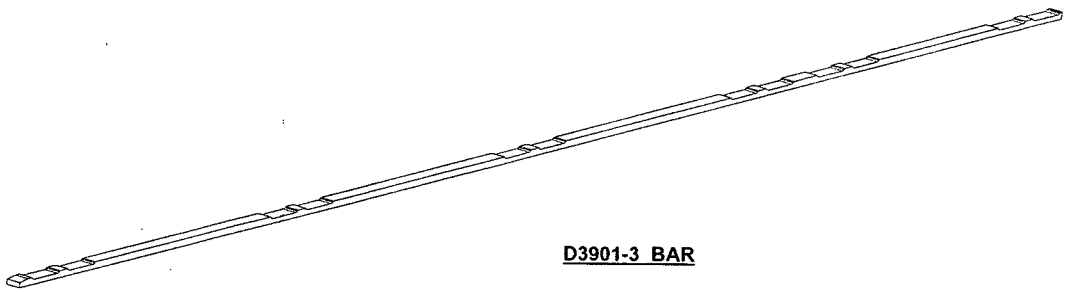

D3901-3 BAR

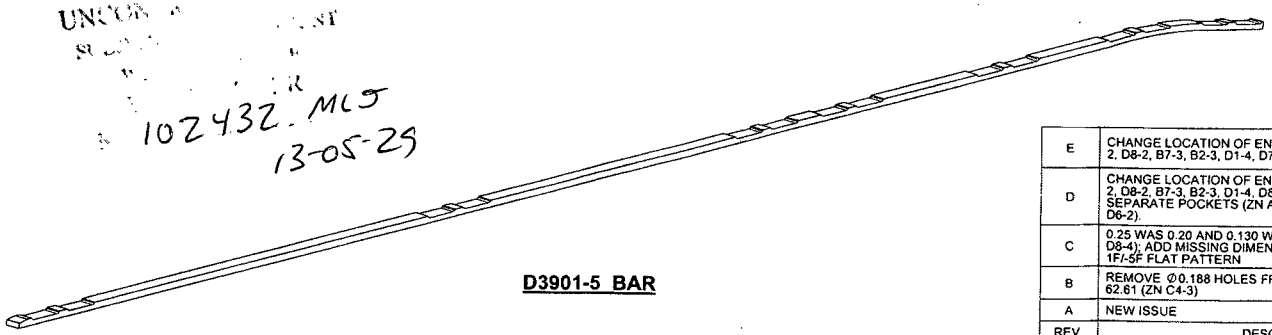

D3901-5 BAR

UNCONTROLLED COPY
102432. MLS
13-05-29

RELEASED
2012 -09- 04

REV.	DESCRIPTION	BY	DATE
E	CHANGE LOCATION OF END POCKETS ON -1/-3/-5 (ZN B1-2, D8-2, B7-3, B2-3, D1-4, D7-4).	DC	12.08.23
D	CHANGE LOCATION OF END POCKETS ON -1/-3/-5 (ZN D1-2, D8-2, B7-3, B2-3, D1-4, D8-4). SPLIT POCKETS INTO TWO SEPARATE POCKETS (ZN A2-2). ADD POCKET TO -1 (ZN D6-2).	DC	12.08.21
C	0.25 WAS 0.20 AND 0.130 WAS 0.080 (ZN B2-2, B1-2, B1-3, D8-4); ADD MISSING DIMENSIONS (ZN C5-3); ADD D3901-1F/-5F FLAT PATTERN	RF	12.01.24
B	REMOVE Ø0.188 HOLES FROM D3901-1/-3/-5; 62.12 WAS 62.61 (ZN C4-3)	RF	09.06.30
A	NEW ISSUE	RF	09.03.30

DESIGN	RF	**DART AEROSPACE USA, INC.** KENT, WA
DRAWN	DC	
CHECKED		DRAWING NO. D3901 REV. E
MFG. APPR.		SHEET 1 OF 4
APPROVED		TITLE BAR SCALE NTS
DE APPR.		
DATE	12.08.23	

COPYRIGHT © 2009 BY DART AEROSPACE USA, INC.
THIS DOCUMENT IS PRIVATE AND CONFIDENTIAL AND IS SUPPLIED ON THE EXPRESS CONDITION THAT IT IS NOT TO BE USED FOR ANY PURPOSE OR COPIED OR COMMUNICATED TO ANY OTHER PERSON WITHOUT WRITTEN PERMISSION FROM DART AEROSPACE USA, INC.

102432

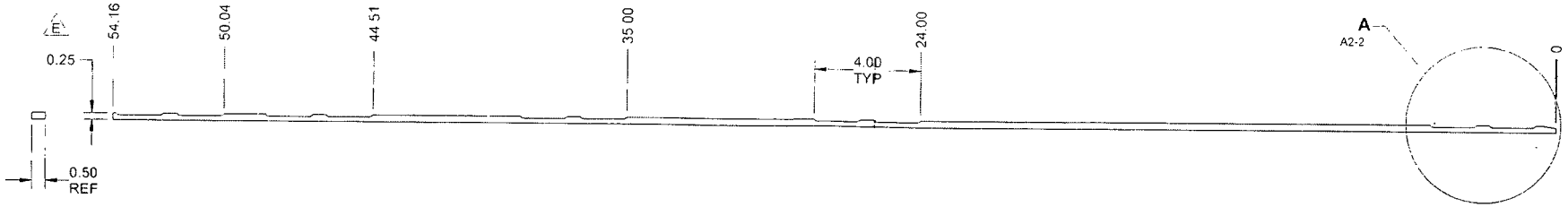

D3901-1F BAR FLAT PATTERN

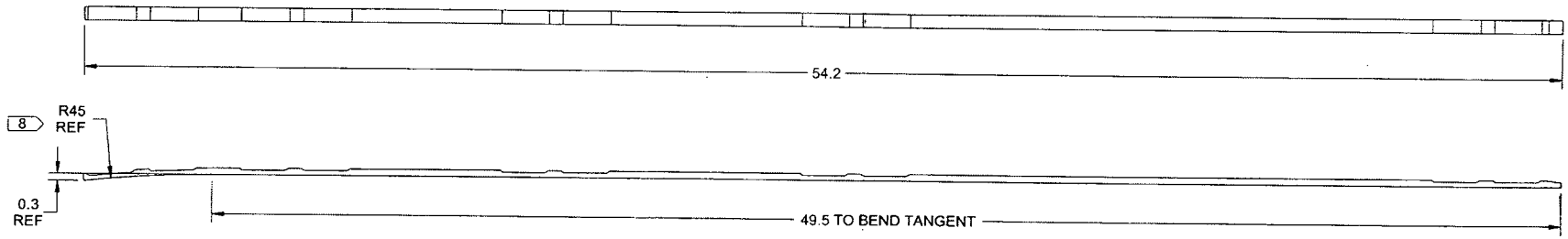

D3901-1 BAR
(MAKE FROM D3901-1F)

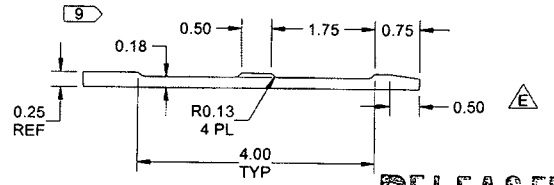

DETAIL A TYP D1-2 B2-3 D1-4

RELEASED
2012 -09- 04

NOTES:
1) MATERIAL: AISI 304/316 STAINLESS STEEL BAR, 0.250 THICK X 0.500 WIDTH
PER ASTM A276 OR ASTM A240
REF. DART SPEC. M304B0.250X0.500
2) FINISH: NONE
3) TOLERANCES: PER DART QSI 018 UNLESS OTHERWISE NOTED
4) UNITS: INCHES UNLESS OTHERWISE NOTED
5) BREAK SHARP EDGES: 0.005 TO 0.010 MAX
6) IDENTIFICATION: NONE
7) WEIGHT: 1.78 lbs
8) FORM TO FIT WEARPLATE
9) ANGLE TO BE DETERMINED BY AVAILABLE TOOLING

DESIGN	RF	DART AEROSPACE USA, INC. KENT, WA
DRAWN	SC	
CHECKED		DRAWING NO. D3901 REV. E
MFG. APPR.		SHEET 2 OF 4
APPROVED		TITLE BAR SCALE NTS
DE APPR.		
DATE	12.08.23	

COPYRIGHT © 2009 BY DART AEROSPACE USA, INC.
THIS DOCUMENT IS PRIVATE AND CONFIDENTIAL AND IS SUPPLIED ON THE EXPRESS CONDITION THAT IT IS NOT TO BE USED FOR ANY PURPOSE OR COPIED OR COMMUNICATED TO ANY OTHER PERSON WITHOUT WRITTEN PERMISSION FROM DART AEROSPACE USA, INC.